16

U.S. PUBLIC LAND CORNER MAINTENANCE

Corner ID: E1/4 Sec. 5, T18N-R1W

21801052000

DATE	CREW	MONUMENT TYPE----------
October 16, 2019	Zachariah P. Dechant Gary L. Dechant	Found Harrison intact at downed fence corner, east of field road, steel post 1' north

References:

	Bearing	Distance
1) Set 3/4"x24" round iron bar, down 4", 4' SW of 4" White Pine	N41E	37.46'
2) Set 3/4"x24" round iron bar, down 4", 4' SW of 6" Black Oak	N60E	35.15'
3) Set 3/4"x24" round iron bar, down 10" in middle of field road	S56W	25.75'
4) Set 3/4"x24" round iron bar, down 10" in middle of field road	N46W	22.69'

Gary L. Dechant

WISCONSIN
GARY L.
DECHANT
S-1744
CAMP
DOUGLAS, WI
LAND SURVEYOR

October 16 2019

CERTIFICATE

I, Harley Sime, do hereby certify that on the _____ day of _____ 1974, I found (evidence) ~~(no evidence)~~ of the E 1/4 corner of Section 5, T 18 N, R 1 W Fourth Principal Meridian, and I re-established said corner according to the Wisconsin Statutes as shown and described hereon.

Dated this 25 day of Feb 1975.

Harley A. Sime

County Surveyor
Title

CERTIFIED LAND CORNER

No. 16

History of original corner establishment:

Description of corner evidence found:

Found an existing Harrison monument from a previous survey in a fence line. The monument fit computations well.

See Reverse Side For Maintenance

COUNTY SURVEYOR FORM NO. 1

Description of corner and witness monuments, references and accessories used to perpetuate the original or re-established location of this corner:

Standard Harrison monument up 2". Accessories shown below.

Witnesses to corner location:

SURVEY CREW

K. Pritzlaff - Survey Crew Chief

D. Malliet

B. Jung W. C. Jung

A. Lueck

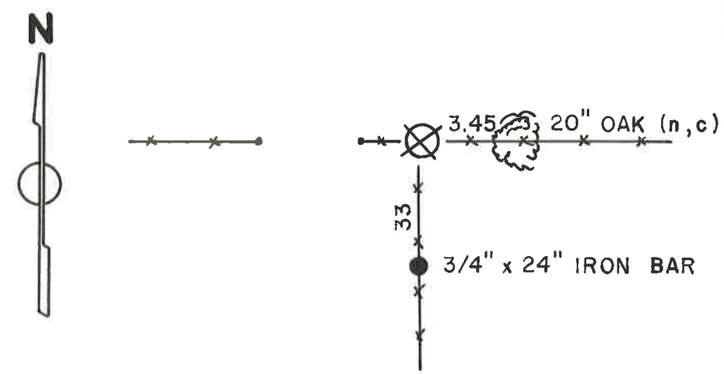

WISCONSIN
WILLIAM C. JUNG
S-1323
TOMAH, WIS.
LAND SURVEYOR

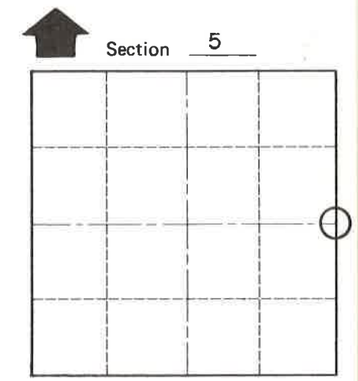

O = LOCATION CORNER

T 18 N R 1 W

WISCONSIN

SURVEY CONTROL ORDER

Horizontal	
Vertical	

WISCONSIN COORDINATE SYSTEM

Corner	East (X)	North (Y)	Elevation (Z)	Zone
Control Sta. Name				

City, Village or Town La Grange

County of Monroe